OPTICAL & MECHANICAL SPECIFICATIONS

1.Application		For 1/3" Format Color Camera
2.Focal Length		3 mm - 8 mm
3.Maximum Relative Aperture		1 : 1.4
4.Iris Range		F1.4 - T360 (Equivalent to F360)
5.Image Size		ø6 mm (4.8 mm X 3.6 mm)
6.Back Focal Length		8.1mm(W) - 14.9mm(T) (in air)
7.Flange Focal Length		12.5 mm (in air)
8.Focus Range		∞ - 0.3 m (from Front of Lens)
9.Field Angle		
	a) Horizontal	Wide 94°56' Tele 34°34'
	b) Vertical	Wide 69°32' Tele 25°55'
	c) Diagonal	Wide 122°11' Tele 43°13'
10.Field of View at M.O.D		
	a) Horizontal	Wide 676 mm Tele 193 mm
	b) Vertical	Wide 430 mm Tele 142 mm
11.Clear Aperture		
	a) Front	ø17.4 mm
	b) Rear	ø6.5 mm
12.Exit Pupil Position		-97mm(W) -28mm(T) (from Image Plane)
13.Control		
	a) Iris	See Electrical Spec.
	b) Zoom (*1)	Manual (Op. Angle 60.3°)
	c) Focus	Manual (Op. Angle 83.6°)
14.Mount		CS-Mount
15.Filter Screw Size		———
16.Mass		Approx. 50 g

(*1) Out of Focus occurs during Zoom operation due to the specification,Vari-focal length lens.

ELECTRICAL SPECIFICATIONS

Iris Characteristics		
	a) Control	Auto (Not Incorporating Amplifier)
	b) Coil Resistance	Drive Coil 190 Ω±10%
		Damping Coil 500 Ω±10%
	c) Operating Current	23 mA (Max.) at 4V DC

* When power is turned off,iris will automatically be closed.

WIRING DIAGRAM

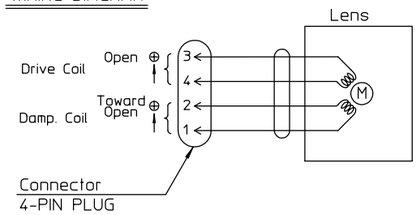

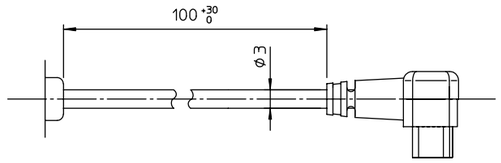

アイリスコントロールケーブル
IRIS CONTROL CABLE
(CONNECTOR : 4-PIN PLUG)

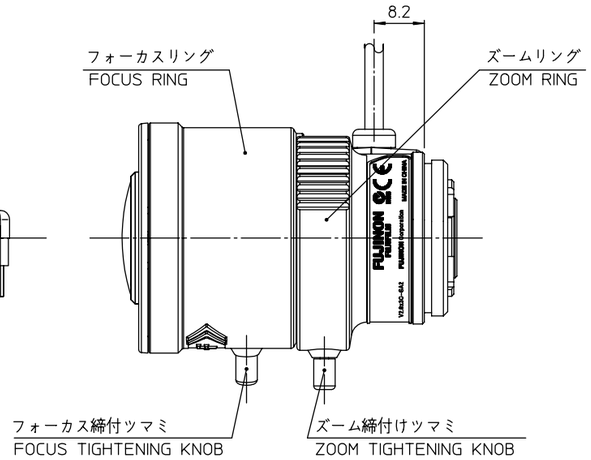

ENVIRONMENTAL CONDITIONS

1.Temperature		
	a) Operating	-10°C to +50°C
	b) Storage	-20°C to +60°C
2.Relative Humidity		35% to 90%

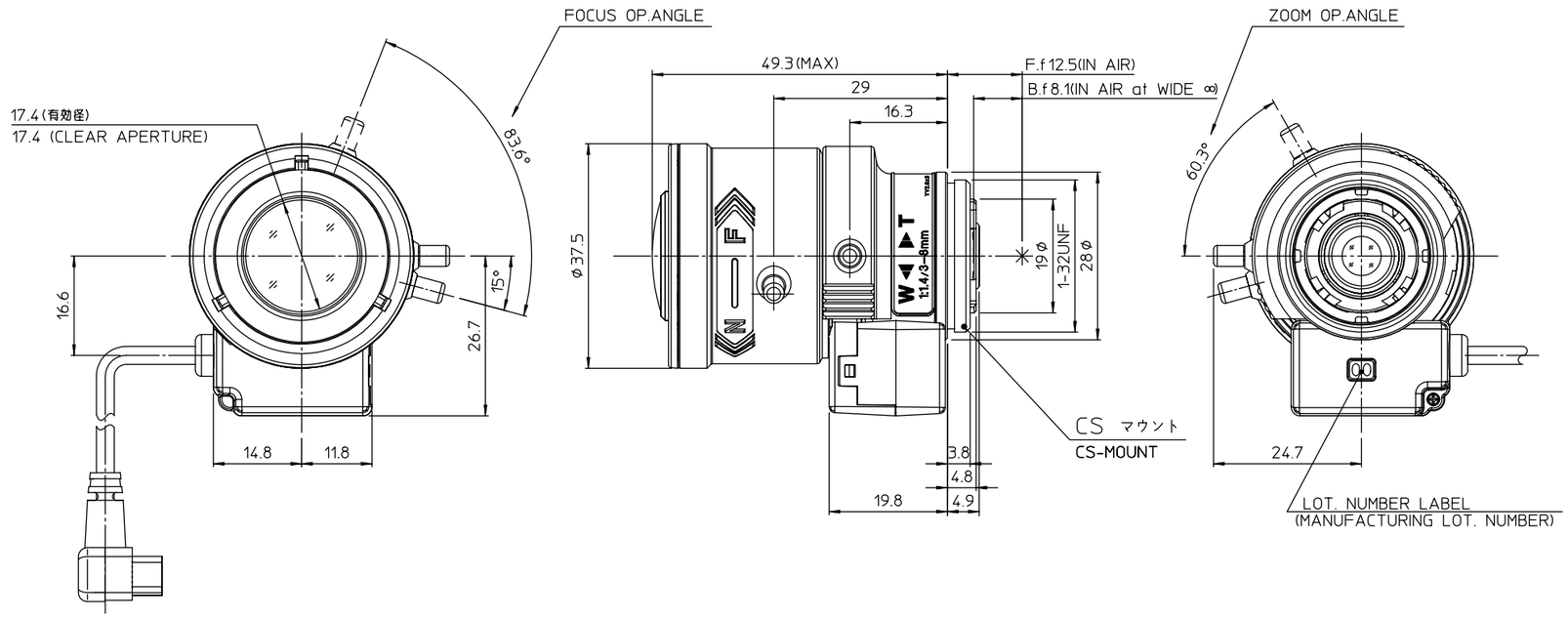

GLC182ASA20111

FUJINON
FUJIFILM

レンズ本体： 外観図
Outline drawing
YV2.6x3C-SA2

Fig. 1