AE-VC151T-IT Series IR Mobile Dome Camera

Key Features

- 1.0MP Progressive Scan CMOS
- Turbo HD output, up to 720P resolution
- 0.1Lux @(F1.2,AGC ON),0 Lux with IR
- Adopt wide-angle lens with wider monitoring coverage
- Support electronic shutter, AGC and auto Day & Night switch
- Up to IP68 protection level
- Anti-vibration design and aviation port for mobile environments

Specifications

Camera	
Image Sensor	1.0Mega Progressive Scan CMOS
Signal System	1280(H)×720(V)
Min. Illumination	0.1Lux @ (F1.2,AGC ON),0 Lux with IR
Shutter Time	1/25(30)s to 1/50,000s
Lens	2.1mm (2.8mm/3.6mm optional)
Lens Mount	M12
Angle Adjustment	Tilt: 0-90°
Day & Night	Electronic
Horizontal Definition	950TVL
Synchronization	Internal
Video Output	Aviation port
HD Video Output	1 Turbo HD output, in line with HDTVI standard
Function	Mirror(PTZ control)
General	
Working Temperature/Humidity	-40℃~75℃, Humidity 90% or less (non-condensing)
Power Supply	DC6V-16V
Power Consumption	3.5W MAX
IR Range	20-30m
Protection Level	IP68
Dimension(mm)	113.2mm×54.5mm×82.7mm
Weight	200g

Order Models

AE-VC151T-IT (2.1mm)

AE-VC151T-IT (2.8mm)

AE-VC151T-IT (3.6mm)

Dimensions

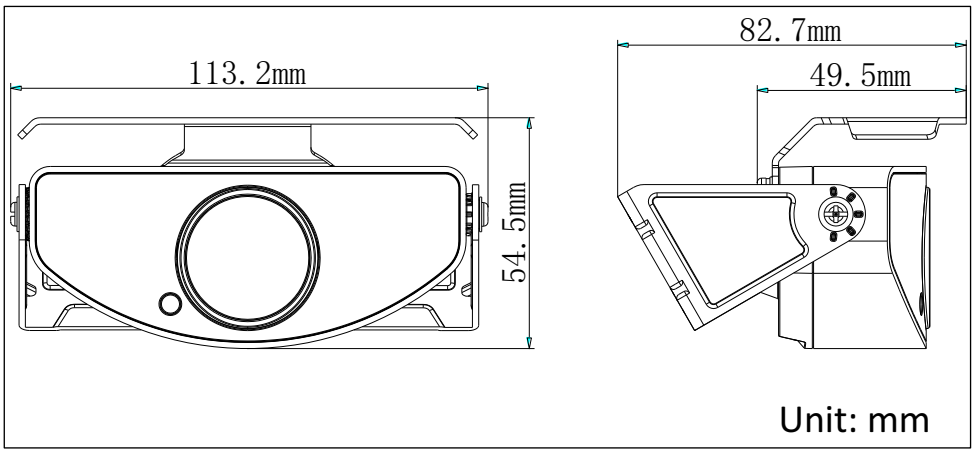

Accessories

DS-1280ZJ-XS

Junction box

DS-1H18

Video Balun

X41T

Camera Tester

Distributed by

Headquarters
No.555 Qianmo Road, Binjiang District,
Hangzhou 310051, China
T +86-571-8807-5998
overseasbusiness@hikvision.com

Hikvision USA
T +1-909-895-0400
sales.usa@hikvision.com

Hikvision Europe
T +31-23-5542770
saleseuro@hikvision.com

Hikvision Middle East
T +971-4-8816086
salesme@hikvision.com

Hikvision Russia
T +7-495-669-67-99
saleru@hikvision.com

Hikvision India
T +91-22-28469900
sales@pramahikvision.com

Hikvision Italy
T +39-0438-6902
info.it@hikvision.com

Hikvision France
T +33(0)1-85-330-444
info.fr@hikvision.com

Hikvision Spain
T +34-91-737-16-55
info.es@hikvision.com

Hikvision Poland
T +48-22-460-01-50
poland@hikvision.com

Hikvision UK
T +44-1628-9021-4
support.uk@hikvision.com

Hikvision Singapore
T +65-6684-4718
sg@hikvision.com

Hikvision Oceania
T +61-2-8599-4233
salesau@hikvision.com

Hikvision Hong Kong
T +852-2151-1761

© Hikvision Digital Technology Co., Ltd. 2015 | Data subject to change without notice | **20150918**