HAIKON
By Hikvision Digital Technology

DS-2CE16D5T-IT5

Key Features

- 2 Megapixel high-performance CMOS
- Analog HD output, up to 1080P resolution
- True Day/Night
- OSD menu, 3D DNR, Smart IR
- True WDR, up to 120dB
- EXIR technology, up to 80m IR distance
- IP66 weatherproof
- UTC function(Pelco C protocol)

Specification

Model / Parameter	DS-2CE16D5T-IT5
	Turbo HD1080p EXIR Bullet Camera
Camera	
Image Sensor	2MP CMOS Image Sensor
Signal System	PAL/NTSC
Effective Pixels	1944(H)*1092(V)
Min. Illumination	0.01 Lux @(F1.2,AGC ON), 0 Lux with IR
Shutter Time	1/25(1/30) s to 1/50,000 s
Lens	3.6mm (6mm, 8mm, 12mm, 16mm optional)
	Angle of View: 82.6°(3.6mm), 54.4°(6mm), 38°(8mm), 24.4°(12mm), 18.9°(16mm)
Lens Mount	M12
Day & Night	ICR
Angle Adjustment	Pan: 0 - 360°, Tilt: 0 - 90°, Rotation: 0 - 360°
Synchronization	Internal synchronization
WDR	120dB
Video Frame Rate	1080p@25fps/1080p@30fps

©2006 – 2014 by HIKVISION. All rights reserved.

HD Video Output	1 Analog HD output
CVBS Output	1Vp-p Composite Output(75Ω/BNC)
S/N Ratio	＞62dB
Menu	
Scene	Indoor, Outdoor, Indoor1, LOW-LIGHT
Camera ID	On/off (15 characters, position programmable)
AGC	Support
D/N Mode	Color/BW/EXT
White Balance	ATW, AWC-SET, Indoor, Outdoor, Manual
Privacy Mask	On/Off, maximum 8 zones
Motion Detection	On/Off, maximum 4 zones
BLC	Support
Anti-flicker	On/off
Language	English, Japanese, CHN1, CHN2, Korean, German, French, Italian, Spanish, Polish, Russian, Portuguese, Dutch, Turkish, Hebrew and Arabic
Functions	Eclipse, Digital noise reduction, Digital zoom(62x), Slow shutter, Mirror, Defog, Defect pixel correction, SMART D-ZOOM
General	
Working Temperature/Humidity	-30 °C – 60 °C (-22 °F – 140 °F) Humidity 90% or less (non-condensing)
Power Supply	12V DC±15%
Power Consumption	Max. 5W
Weather Proof Ratings	IP66
IR Range	Up to 80m
Communication	Up the coax Protocol: Pelco-C(CVBS output), HIKVISION-C(TVI output)
Dimensions	105×104.8×263.1mm(4.13” ×4.13” ×10.36”)
Weight	800g (1.76 lbs)

Order Model

DS-2CE16D5T-IT5

©2006 – 2014 by HIKVISION. All rights reserved.

Dimensions

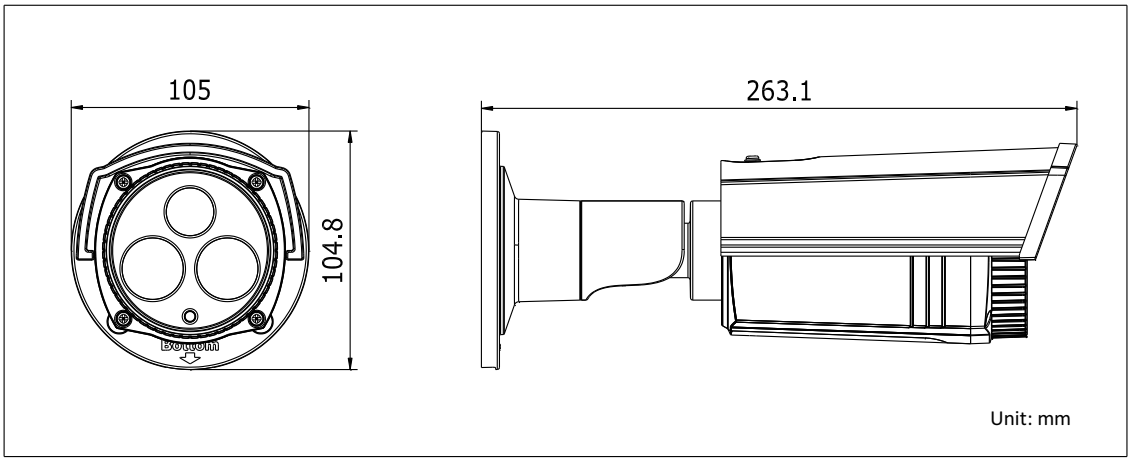

Accessories

DS-1275ZJ
Vertical Pole Mounting

DS-1260ZJ
Junction box

DS-1280ZJ-S
Junction box

DS-1H18
Video Balun

DS-TT-X41T
TVI Tester

©2006 – 2014 by HIKVISION. All rights reserved.