DS-2CE56H0T-ITMF
5 MP Turret Camera

Key Features

- 5 MP high performance COMS
- 2560 × 1944 resolution
- 2.8 mm, 3.6 mm, 6 mm fixed lens
- EXIR 2.0, smart IR, up to 20 m IR distance
- OSD menu, 2D DNR, DWDR
- 4 in 1 video output (switchable TVI/AHD/CVI/CVBS)
- IP67
- Up the coax (HIKVISION-C)

Specification

Camera	
Image Sensor	5 MP CMOS image sensor
Effective Pixels	2560 (H) × 1944 (V)
Min. Illumination	Color: 0.01 Lux @ (F1.2, AGC ON), 0 Lux with IR
Shutter Time	PAL: 1/25 s to 1/50, 000 s NTSC: 1/30 s to 1/50, 000 s
Lens	2.8 mm, 3.6 mm, 6 mm fixed Lens
Horizontal Field of View	85.5° (2.8 mm), 80.1° (3.6 mm), 57.1° (6 mm)
Lens Mount	M12
Day & Night	IR cut filter
Angle Adjustment	Pan: 0° to 360°; Tilt: 0° to 75°; Rotate: 0° to 360°
Synchronization	Internal synchronization
Frame Rate	PAL: 5 MP@20fps, 4 MP@25fps, 1080p@25fps NTSC: 5 MP@20fps, 4 MP@30fps, 1080p@30fps
Menu	
AGC	Support
D/N Mode	Auto/Color/BW (Black and White)
White Balance	ATW/MWB
BLC	Support
DWDR (Digital Wide Dynamic Range)	Support
Language	English
Functions	Brightness, Sharpness, DNR, Mirror, Smart IR
Interface	
Video Output	1 HD analog output
Switch Button	TVI/AHD/CVI/CVBS
General	
Operating Conditions	-40 °C to 60 °C (-40 °F to 140 °F), humidity: 90% or less (non-condensation)
Power Supply	12 VDC ±25%
Power Consumption	Max. 4.3 W
Protection Level	IP67
Material	Metal
IR Range	Up to 20 m
Communication	Up the coax, Protocol: HIKVISION-C (TVI output)
Dimensions	91 mm × 82.6 mm × 68.3 mm (3.58" × 3.25" × 2.69")
Weight	Approx. 350 g (0.77 lb.)

Order Model

DS-2CE56H0T-ITMF

Dimension

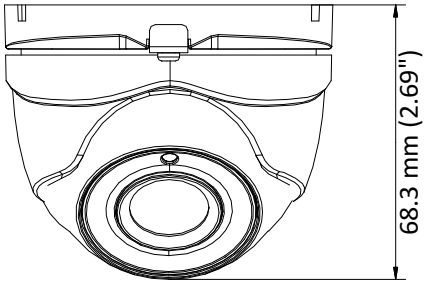

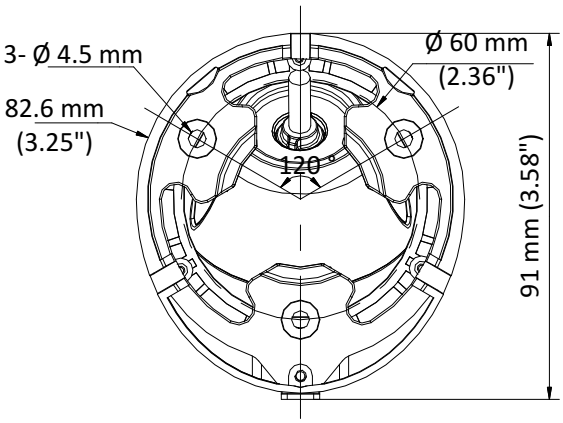

Accessory

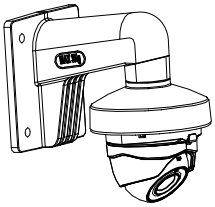

DS-1272ZJ-110-TRS
Wall Mount

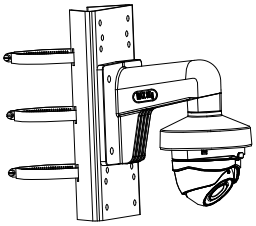

DS-1275ZJ
Vertical Pole Mount

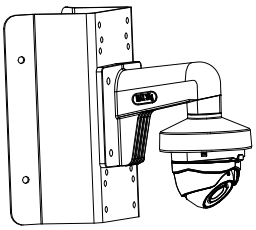

DS-1276ZJ-SUS
Corner Mount

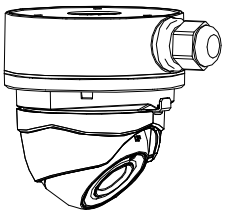

DS-1280ZJ-XS
Junction Box

Distributed by

Headquarters
No.555 Qianmo Road, Binjiang District,
Hangzhou 310051, China
T +86-571-8807-5998
overseasbusiness@hikvision.com

Hikvision USA
T +1-909-895-0400
sales.usa@hikvision.com

Hikvision Europe
T +31-23-55-42-770
info.eu@hikvision.com

Hikvision Middle East
T +971-4-8816086
salesme@hikvision.com

Hikvision Russia
T +7-495-669-67-99
saleru@hikvision.com

Hikvision India
T +91-22-28469900
sales@pramahikvision.com

Hikvision Italy
T +39-0438-6902
info.it@hikvision.com

Hikvision France
T +33(0)1-85-330-450
info.fr@hikvision.com

Hikvision Spain
T +34-91-737-16-55
info.es@hikvision.com

Hikvision Poland
T +48-22-460-01-50
poland@hikvision.com

Hikvision UK
T +01628-902140
support.uk@hikvision.com

Hikvision Singapore
T +65-6684-4718
sg@hikvision.com

Hikvision Oceania
T +61-2-8599-4233
salesau@hikvision.com

Hikvision Canada
T +1-909-895-0400
sales.usa@hikvision.com

Hikvision Korea
T +82-31-731-8841
sales.korea@hikvision.com

Hikvision Brazil
T +55 11 3318-0050
Latam.support@hikvision.com

Hikvision Africa
T +27 (10) 0351172
sale.africa@hikvision.com

Hikvision Hong Kong
T +852-2151-1761

© Hikvision Digital Technology Co., Ltd. 2017 | Data subject to change without notice |

010000171122