WISENET Q

QNO-7080R

4M Network IR Bullet Camera

Key Features

- Max. 4megapixel resolution
- 2.8 ~ 12mm (4.3x) motorized varifocal lens
- Max. 20fps@4M, Max.30fps@2M all resolutions
- H.265, H.264, MJPEG codec supported, Multiple streaming
- Day & Night (ICR), WDR (120dB)
- Motion detection, Tampering, Defocus detection
- micro SD/SDHC/SDXC memory slot (Max. 128GB), PoE / 12V DC
- IR viewable length 30m, IP66, IK10
- Hallway view support
- LDC support (Lens Distortion Correction)

Dimensions

Unit : mm (inch)

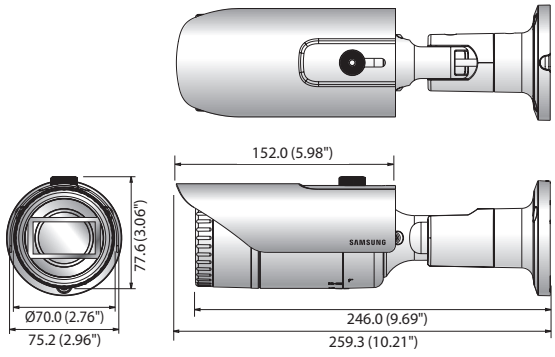

Accessories (Optional)

SBO-100B1

SBP-302PM

	QNO-7080R
VIDEO	
Imaging Device	1/3" 4M CMOS
Total Pixels	2,720(H) x 1,536(V)
Effective Pixels	2,688(H) x 1,520(V)
Scanning System	Progressive
Min. Illumination	Color : 0.15Lux (30IRE), B/W : 0Lux (IR LED on)
LENS	
Focal Length (Zoom Ratio)	2.8 ~ 12mm (4.3x) motorized varifocal
Max. Aperture Ratio	F1.4
Angular Field of View	H : 109.7° ~ 26.0° / V : 60.8° ~ 15.2° / D : 131.3° ~ 30.1°
Focus Control	Simple focus (Motorized V/F) / Manual, Remote control via network
Lens Type	DC auto iris
Mount Type	Board type
OPERATIONAL	
IR Viewable Length	30m (98.43ft)
Camera Title	Off / On (Displayed up to 20 characters per line) - W/W : English / Numeric / Special characters - China : English / Numeric / Special / Chinese characters - Common : Multi-line (Max. 5), Color (Grey / Green / Red / Blue / Black / White), Transparency, Auto scale by resolution
Day & Night	True Day & Night
Backlight Compensation	Off / BLC / WDR
Wide Dynamic Range	120dB
Digital Noise Reduction	SSNR (Off / On)
Motion Detection	Off / On (4ea polygonal zones)
Privacy Masking	Off / On (6ea rectangular zones)
Gain Control	Off / Low / Middle / High
White Balance	ATW / AWC / Manual / Indoor / Outdoor
LDC (Lens Distortion Correction)	Off / On (5 levels with min / max)
Electronic Shutter Speed	Minimum / Maximum / Anti flicker
Flip / Mirror	Flip / Mirror / Hallway view
Intelligent Video Analytics	Motion detection with metadata, Tampering, Defocus detection
Alarm I/O	Input 1 / Output 1
Alarm Triggers	Motion detection, Tampering detection, SD card error, NAS error, Alarm input, Defocus detection
Alarm Events	File upload via FTP and E-mail, Local storage recording at event, Notification via E-mail, External output
Pixel Counter	Support (Plug-in viewer only)
NETWORK	
Ethernet	RJ-45 (10/100BASE-T)
Video Compression Format	H.265, H.264, MJPEG
Resolution	2592 x 1520, 2560 x1440 (16 : 9), 2304 x 1296, 1920 x 1080, 1280 x 1024, 1280 x 960, 1280 x 720, 1024 x 768, 800 x 600, 800 x 448, 720 x 576, 720 x 480, 640 x 480, 640 x 360, 320 x 240
Max. Framerate	H.265/H.264 : Max. 20fps at 4M, Max. 30fps at 2M all resolutions, MJPEG : Max. 15fps
Smart Codec	WiseStream
Video Quality Adjustment	H.265/H.264 : Target bitrate level control, MJPEG : Quality level control
Bitrate Control Method	H.265/H.264 : CBR or VBR, MJPEG : VBR
Streaming Capability	Multiple streaming (Up to 3 profiles)
Audio I/O	Line in
Audio Compression Format	G.711 u-law / G.726 selectable G.726 (ADPCM) 8KHz, G.711 8KHz, G.726 : 16Kbps, 24Kbps, 32Kbps, 40Kbps
Audio Communication	Uni-directional audio
IP	IPv4, IPv6
Protocol	TCP/IP, UDP/IP, RTP(UDP), RTP(TCP), RTCP, RTSP, NTP, HTTP, HTTPS, SSL/TLS, DHCP, PPPoE, FTP, SMTP, ICMP, IGMP, SNMPv1/v2c/v3(MIB-2), ARP, DNS, DDNS, QoS, PIM-SM, UPnP, Bonjour
Security	HTTPS(SSL) login authentication, Digest login authentication IP address filtering, User access log, 802.1x authentication
Streaming Method	Unicast / Multicast
Max. User Access	6 users at unicast mode
Storage	micro SD/SDHC/SDXC (Max. 128GB), NAS - Motion images recorded in the SD memory card can be downloaded - Manual recording at local PC
Application Programming Interface	ONVIF Profile S/G, SUNAPI (HTTP API)
Webpage Language	English, Korean, Chinese, French, Italian, Spanish, German, Japanese, Russian, Swedish, Portuguese, Czech, Polish, Turkish, Dutch, Hungary, Greek
Web Viewer	Supported OS : Windows 7, 8.1, 10, Mac OS X 10.9, 10.10, 10.11 Plug-in free Webviewer - Supported Browser : Google Chrome 47, MS Edge 20 Plug-in Webviewer - Supported Browser : MS Explore 11, Mozilla Firefox 43, Apple Safari 9 * Mac OS X only
Central Management Software	SmartViewer
ENVIRONMENTAL	
Operating Temperature / Humidity	-30°C ~ +55°C (-22°F ~ +131°F) / Less than 90% RH * Start up should be done at above -20°C (-4°F)
Storage Temperature / Humidity	-30°C ~ +60°C (-22°F ~ +140°F) / Less than 90% RH
Ingress Protection	IP66
Vandal Resistance	IK10
ELECTRICAL	
Input Voltage / Current	PoE (IEEE802.3af, Class3) / 12V DC
Power Consumption	Max. 8W (PoE), Max. 7W (12V DC)
MECHANICAL	
Color / Material	Dark gray / Metal
Dimensions (WxH)	Ø70.0 x 246.0mm (Ø2.76" x 9.69") (Without sunshield)
Weight	750g (1.65 lb)

* The lastest product information / sepecification can be found at hanwha-security.com

FC | c UL us LISTED | CE | FIRST EDITION 07-2016

SAMSUNG WISENET