DH-HAC-HFW1100R

1Megapixel 720P Water-proof HDCVI IR-Bullet Camera

Features

- 1/2.9" 1Megapixel CMOS
- 25/30fps@720P
- High speed, long distance real-time transmission
- Day/Night(ICR), AWB, AGC, BLC, 2D-DNR
- 6mm fixed lens (3.6mm optional)
- Max. IR LEDs length 20m, Smart IR
- IP66, DC12V

DH-HAC-HFW1100R

Technical Specifications

Model	DH-HAC-HFW1100RP	DH-HAC-HFW1100RN
Camera		
Image Sensor	1/2.9" 1Megapixel CMOS	
Effective Pixels	1280(H)×720(V)	
Electronic Shutter	1/50s~1/100,000s	1/60s~1/100,000s
Video Frame Rate	25fps@720P	30fps@720P
Synchronization	Internal	
Mini. Illumination	0.01Lux@F1.2(AGC ON), 0Lux IR on	
Video Output	1-channel BNC HDCVI high definition video output	
Camera Features		
Max. IR LEDs Length	20m, Smart IR	
Day/Night	Auto(ICR) / Color / B/W	
Noise Reduction	2D	
Lens		
Focal Length	6mm (3.6mm optional)	
Angle of View	H: 52.2° (79.7°)	
Mount Type	M12	
General		
Power Supply	DC12V±10%	
Power Consumption	Max 2.2W	
Working Environment	-30°C~+60°C / Less than 95%RH (no condensation)	
Transmission Distance	Over 500m via 75-3 coaxial cable	
Ingress Protection	IP66	
Dimensions(W×D×H)	Φ70mm×154mm	
Weight	0.15kg	

DH-HAC-HFW1100R

Dimensions (mm)

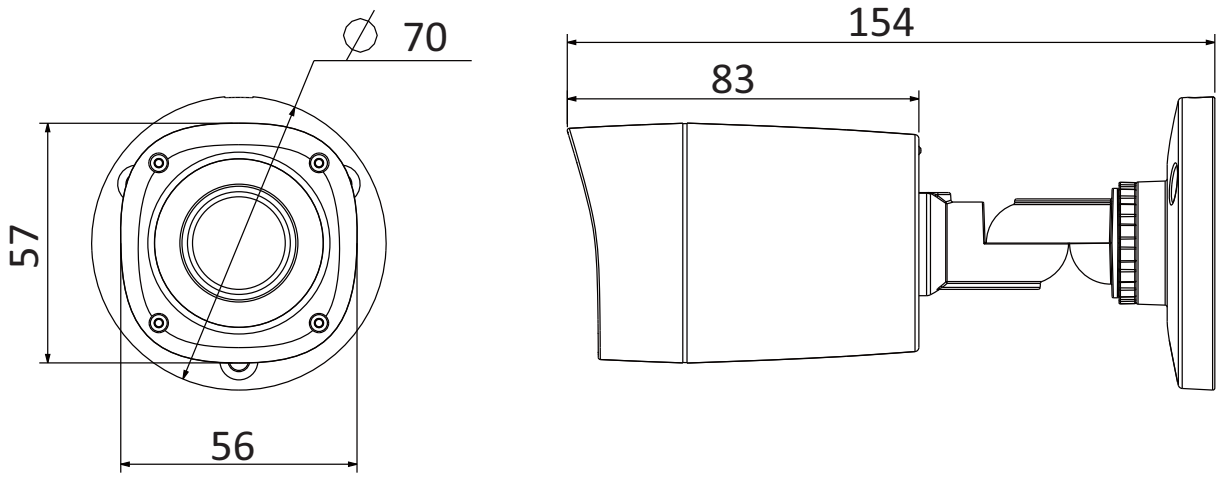

Accessories (optional)

		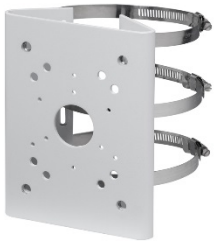	
PFA130	PFA122	PFA150	PFA152

Dahua Technology Co., Ltd.
1199 BinAn Road, Binjiang District, Hangzhou, China
Tel: +86-571-87688883
Fax: +86-571-87688815
Email:overseas@dahuatech.com
www.dahuatech.com

*Design and specifications are subject to change without notice.

© 2014 Dahua Technology Co., Ltd.