IPC-T621H-Z
2 MP IR VF Network Turret Camera

Key Features

- 1/2.7" progressive scan CMOS
- 1920 × 1080@30fps
- 2.8 mm to 12 mm varifocal lens
- H.265+, H.265, H.264+, H.264
- Dual stream
- 3D DNR
- Up to 30 m IR range
- IP67

Specifications

Camera	
Image Sensor	1/2.7" progressive scan CMOS
Min. Illumination	Color: 0.01 Lux @ (F1.2, AGC ON), 0.02 Lux @ (F1.6, AGC ON)
Shutter Speed	1/3 s to 1/100,000 s
Slow Shutter	Yes
Auto-Iris	No
Day &Night	IR cut filter with auto switch
3-Axis Adjustment	Pan: 0° to 360°, tilt: 0° to 75°, rotation: 0° to 360°
DNR (Digital Noise Reduction)	3D DNR
WDR (Wide Dynamic Range)	DWDR
Lens	
Focal Length	2.8 to 12 mm
Aperture	F1.6
Focus	No
FOV	Horizontal FOV 108.5° to 33.2°, vertical FOV 57.5° to 18.8°, diagonal FOV 130° to 38°
Lens Mount	Φ14
IR	
IR Range	Up to 30 m
Wavelength	850nm
Compression Standard	
Video Compression	Main stream: H.265/H.264 Sub stream: H.265/H.264/MJPEG
H.264 Type	Baseline profile/Main profile/High profile
H.264+	Main stream supports
H.265 Type	Main profile
H.265+	Main stream supports
Video Bit Rate	32 Kbps to 8 Mbps
Smart Feature-set	
Region of Interest	Support 1 fixed region for main stream
Image	
Max. Resolution	1920 × 1080
Main Stream Max. Frame Rate	50Hz: 25fps (1920 × 1080, 1280 × 960, 1280 × 720) 60Hz: 30fps (1920 × 1080, 1280 × 960, 1280 × 720)
Sub-stream Max. Frame Rate	50Hz: 25fps (640 × 480, 640 × 360, 320 × 240) 60Hz: 30fps (640 × 480, 640 × 360, 320 × 240)
Image Enhancement	BLC/3D DNR
Image Settings	Brightness, saturation, contrast, sharpness are adjustable via web browser or client software
Day/Night Switch	Support auto, scheduled, day, night
Network	
Alarm Trigger	Motion detection, video tampering, network disconnected, IP address conflict, illegal login, HDD error, HDD full
Network Storage	Support built-in microSD/SDHC/SDXC card (128G), local storage and NAS (NFS,SMB/CIFS), ANR
Protocols	TCP/IP, ICMP, HTTP, HTTPS, FTP, DHCP, DNS, DDNS, RTP, RTSP, RTCP, NTP, UPnP, SMTP, IGMP, 802.1X, QoS, IPv6, Bonjour
General Function	One-key reset, heartbeat, mirror, password protection, privacy mask, watermark, IP address filter
Firmware Version	V5.5.52
API	ONVIF(PROFILE S,PROFILE G), ISAPI

Simultaneous Live View	Up to 6 channels
User/Host	Up to 32 users 3 levels: Administrator, Operator and User
Client	iVMS-4200, Hik-Connect, iVMS-5200, iVMS-4500
Web Browser	IE8+, Chrome 31.0-44, Firefox 30.0-51, Safari 8.0+
Interface	
Communication Interface	1 RJ45 10M/100M self-adaptive Ethernet port
On-board Storage	Built-in microSD/SDHC/SDXC slot, up to 128 GB
Reset Button	Yes
General	
Operating Conditions	-30 °C to 60°C (-22 °F to 140°F), humidity: 95% or less (non-condensing)
Power Supply	12 VDC ± 25%, PoE (802.3af), class 3
Power Consumption	12 VDC, 0.9 A, Max. 10.5 W PoE (802.3af, 36 V to 57 V), 0.4 A to 0.2 A, Max. 12 W
Ingress Protection	IP 67
Material	Camera body: metal, bottom base: plastic
Dimensions	Camera: Ø 129.4 mm × 116.4 mm (5.1" × 4.6") With package: Ø 170 mm × 150 mm (6.7" × 5.9")
Weight	Camera: 560 g (1.2 lb.) With package: 850g (1.9 lb.)

Available Model

IPC-T621H-Z(2.8 to 12 mm)

Dimensions

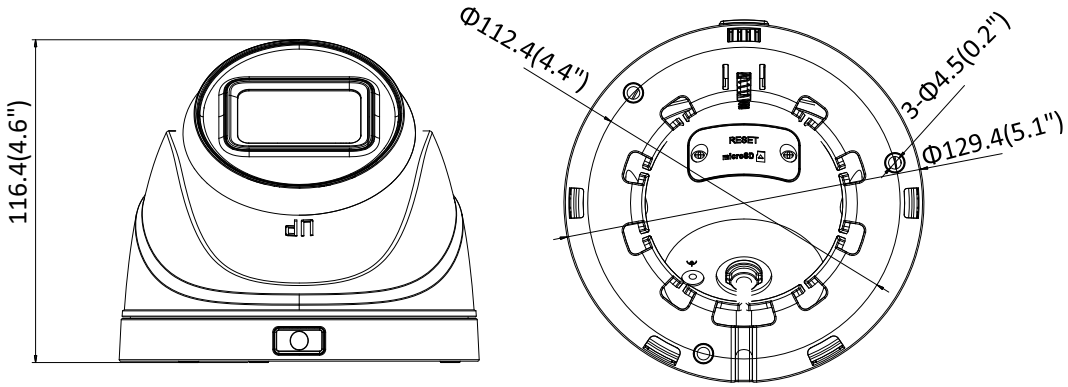

Unit: mm

Accessories

DS-1273ZJ-130-TRL
Wall Mount

DS-1271ZJ-130-TRL
Pendant Mount

DS-1275ZJ
Vertical Pole Mount

DS-1276ZJ
Corner Mount

DS-1280ZJ-M
Junction Box

DS-1281ZJ-M
Inclined Ceiling Mount